Primary Aerodynamic Controls

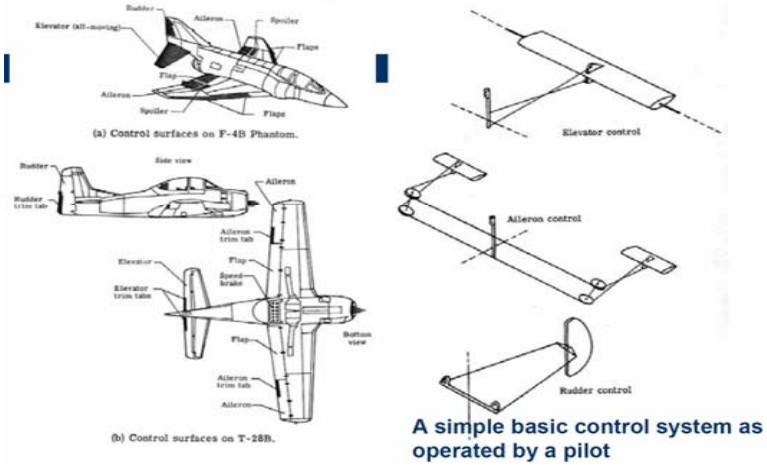

A simple basic control system as operated by a pilot

What About this plane ?

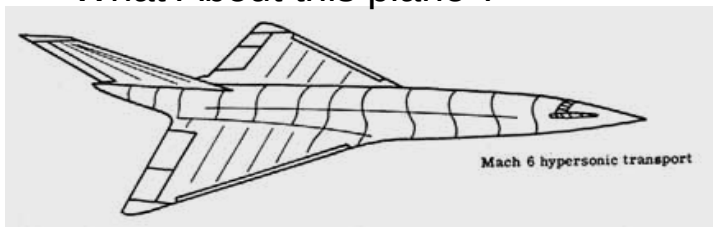

What do you call this control element?

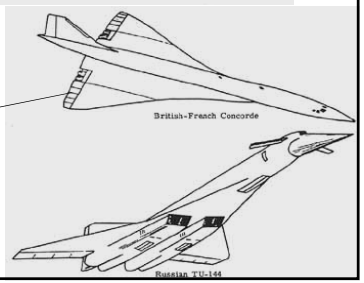

What About this plane ?

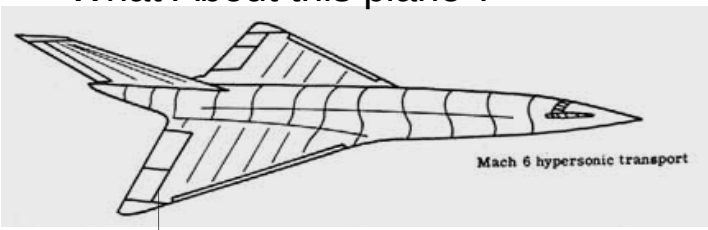

ELEVON

Elevator and aileron

What about V tail ?

The Hornet

Types of Controls

- Cable and Pulley
- Push-Rod
- Hydraulic
- Fly-By-Wire

Cable Controls

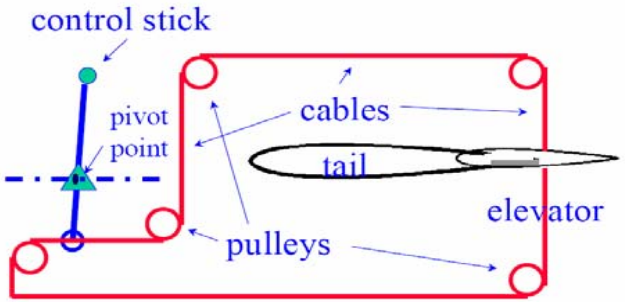

Push-rod Controls

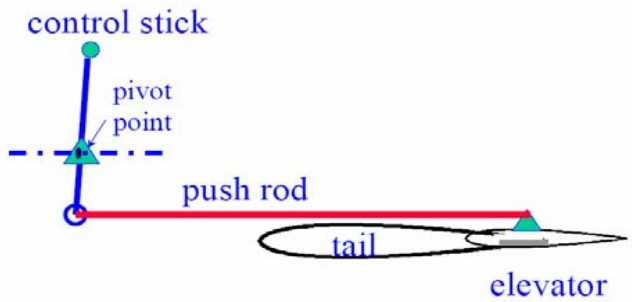

Hydraulic Controls

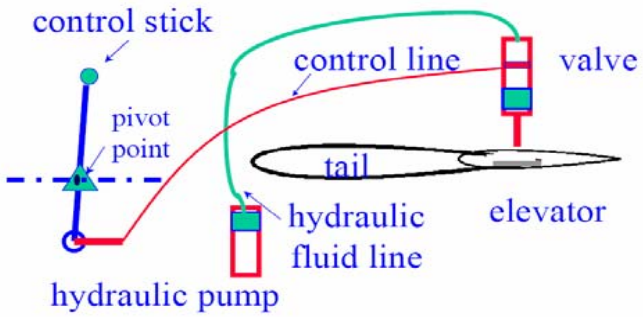

Fly By Wire

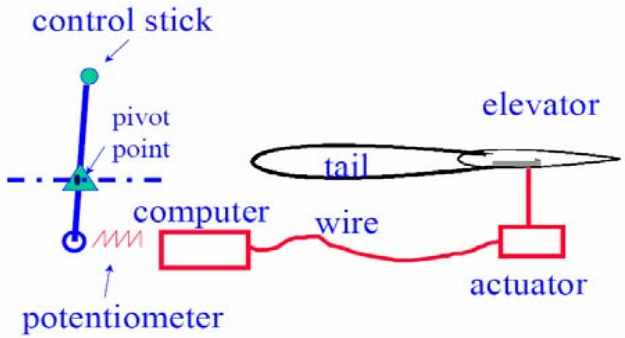

Angle of attack

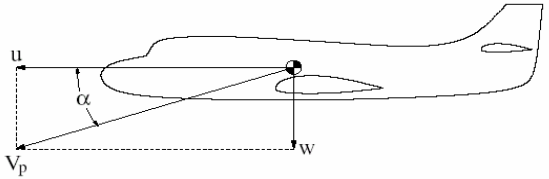

V_p is projection of V onto x_b, z_b plane where

$$V = (u^2 + v^2 + w^2)^{1/2}.$$

Angle of attack,

$$\alpha = \tan^{-1}\frac{w}{u}.$$

For $\alpha < 15°$

$$\alpha \simeq \frac{w}{u}.$$

Sideslip

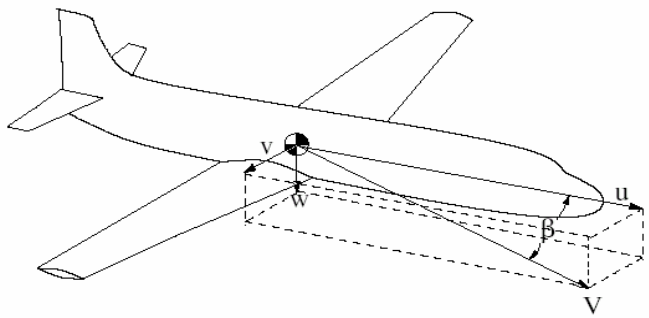

$$\beta = \sin^{-1}\frac{v}{V} \simeq \frac{v}{u}$$

Control System Terminology

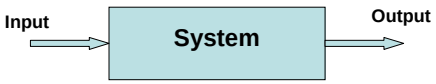

- **System** - Group of elements put together to form a function. System is defined by differential equations governs the relation between input and output (Transfer function).
- **Input** - Excitation applied to a control system from an external source.
- **Output** - The response obtained from a system.
- **Feedback** - The output of a system that is returned to modify the input.
- **Error** - The difference between the input and the output.

Elements of a Feedback Control Loop

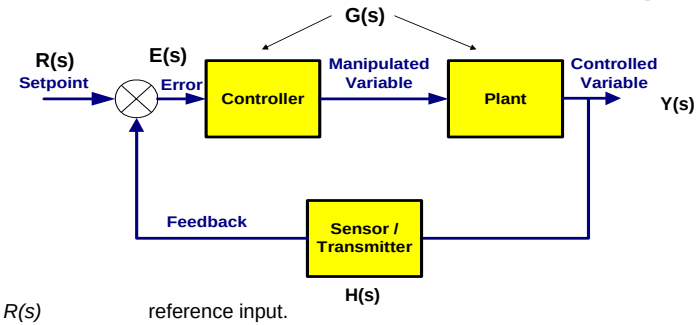

R(s)	reference input.
C(s) or Y(s)	output signal (variable to be controlled).
E(s)	error signal.
G(s)	*Y(s)/E(x)* forward path or open-loop transfer function.
M(s)	*Y(s)/R(s)* the closed-loop transfer function.
H(s)	feedback transfer function.
G(s)H(s)	*open*-loop transfer function.

Types of Control Systems

- **Open-Loop**
  - Simple control system which performs its function with-out concerns for initial conditions or external inputs.
  - Must be closely monitored.
- **Closed-Loop (feedback)**
  - Uses the output of the process to modify the process to produce the desired result.
  - Continually adjusts the process.

Control Modes in Feedback Loops

- Regulation
  - Constant set point.
  - Set point normally changed by human
  - Example
    - Level Control in a Tank.
- Servo (Tracking).
  - Dynamically Variable set point
  - Setpoint normally manipulated by another controller
  - Example
    - radar trackers.

Example 1

- Open or closed loop?
- regulation or tracking ?
- Identify the control loop elements?

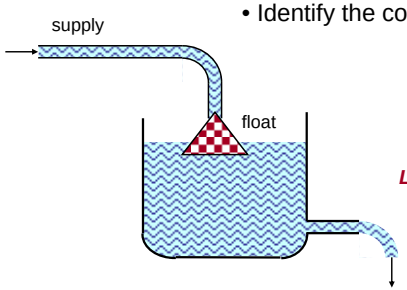

Liquid level & flow control

Simple Feedback Systems

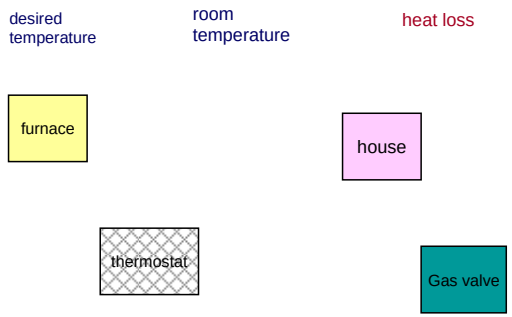

Simple Feedback Systems

OPEN LOOP

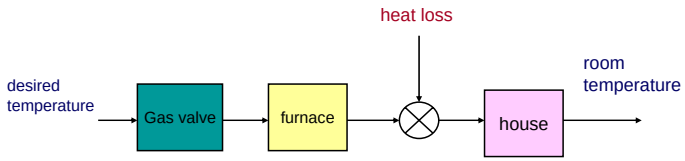

Simple Feedback Systems
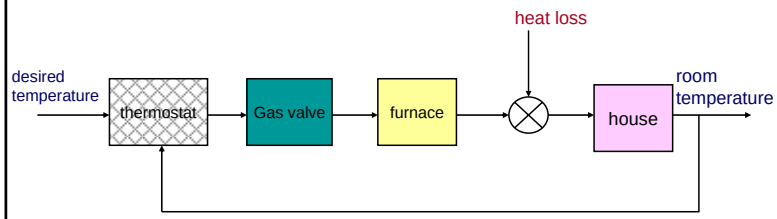
CLOSED LOOP